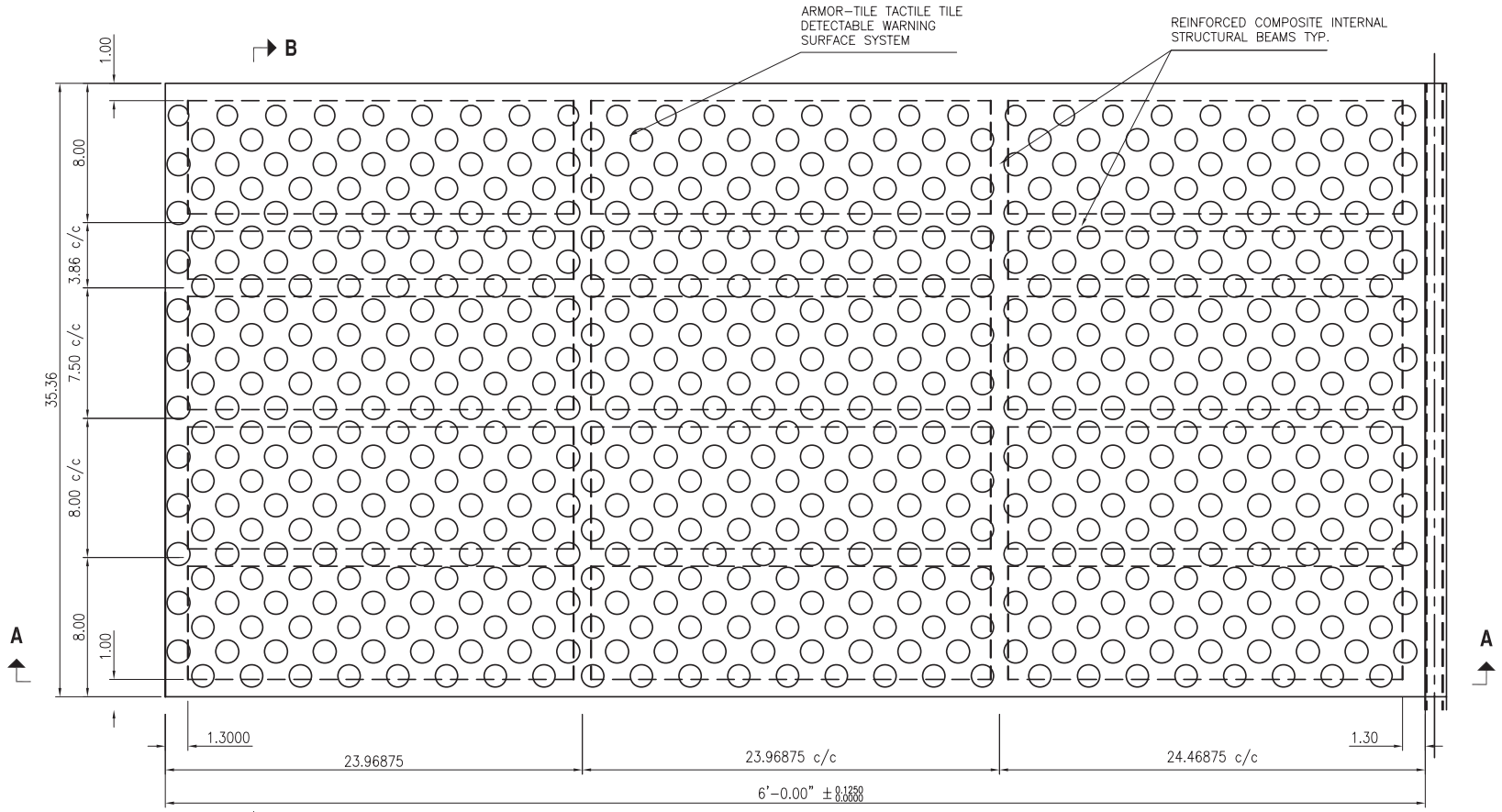

A1 PLAN

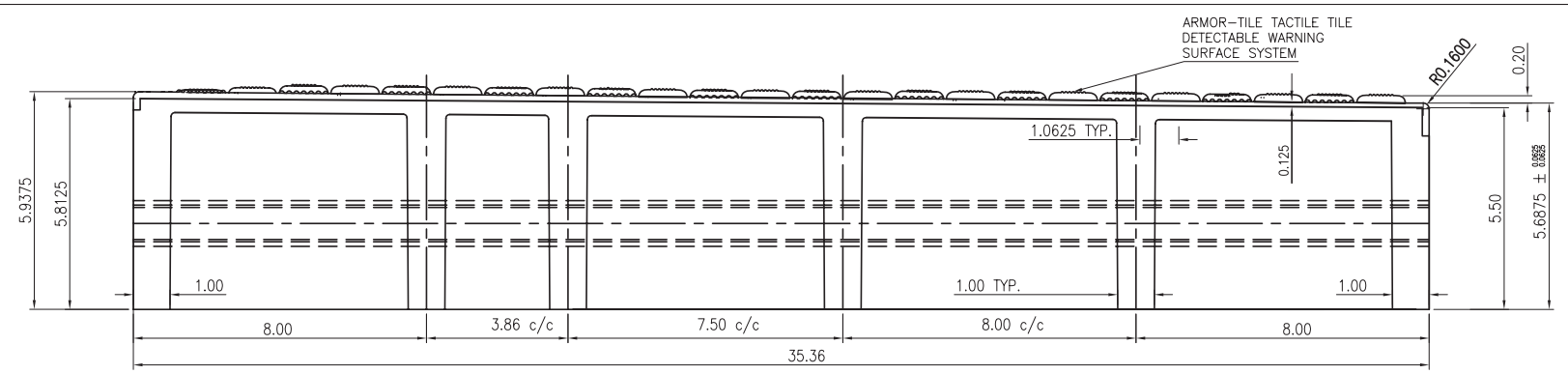

SECTION B–B (SCALE 1:2)

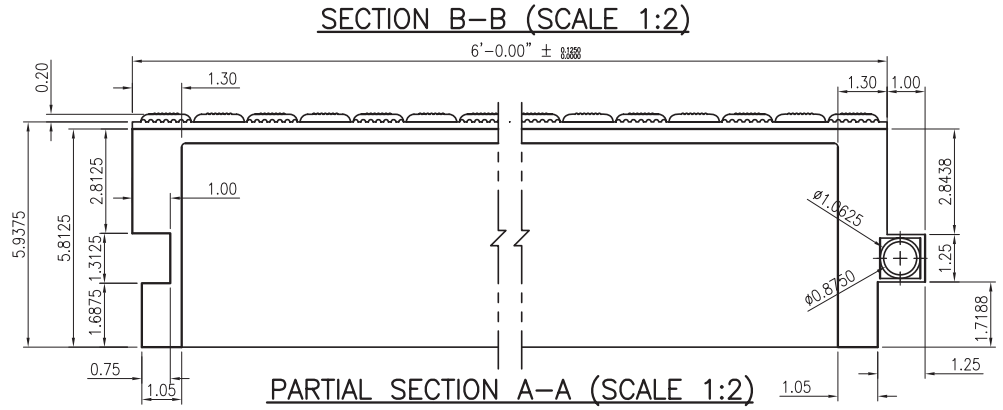

PARTIAL SECTION A–A (SCALE 1:2)

ENGINEERED PLASTICS

© 2006 ENGINEERED PLASTICS
CONFIDENTIAL AND PROPRIETARY DOCUMENT
ANY ONE OR MORE OF THE FOLLOWING PATENTS MAY APPLY
U.S PATENT NO. 5,303,669 5,775,835 6,449,790 AND 6,895,622 B2
C.D.N. PATENT NO. 2,032,532 2,070,984
US PATENTS PENDING.
Ⓓ KENNETH E. SZEKELY

MATERIAL LIST

ITEM	DESCRIPTION	PART NO.	QT'Y
1	ARMOR–DECK AT GRADE	ADG–367206	

REFERENCE DRAWINGS

DWG. NO.	DESCRIPTION

No.	DATE	REVISION	APPR.
2	02/05/07	DIMENSION CORRECTION	J.D
1	06/14/06	GENERAL REVISION	J.D

SCALE	AS NOTED		
DESIGNED BY	K.E.S.	DATE	11/10/04
DRAWN BY	D.G.	DATE	01/06/05
CHECKED BY		DATE	
PROJECT MANAGER			
TRADE	STRUCTURAL COMPOSITE	PART NO.	SEE MATERIAL LIST
MATERIAL	VITRIFIED POLYMER COMPOSITE		

SUBJECT

armor deck

STRUCTURAL REINFORCED POLYMER COMPOSITE AT GRADE TRANSIT BOARDING PLATFORM SYSTEM WITH ARMOR–TILE TACTILE DETECTABLE WARNING SURFACE SYSTEM

PROJECT

3'–0" x 6'–0"
STRUCTURAL REINFORCED POLMER COMPOSITE AT GRADE TRANSIT BOARDING PLATFORM WITH ARMOR–TILE DETECTABLE WARNING SURFACE SYSTEM

DRAWING NO.	SHT. NO.	REV. NO.
ADG–367206	01	2

armor deck™

Toll Free: 1-800-682-2525
Email: info@armordeck.net
www.armordeck.net